Reg. No. | | | | | | | | | | [18MTASD201]

SECOND SEMESTER M.TECH EXAMINATION, JUNE 2019

INTRODUCTION TO FINITE ELEMENT METHODS

Time: 03 Hours **Maximum Marks:100**

Instructions : **i. Answer FIVE full questions.**
ii. Questions numbers one and two are compulsory.
ii. Use calculator random numbers wherever it is not given

1. Consider 4-bar truss shown in the figure with the boundary conditions. Under the load system shown, determine the stresses in all the members of the truss using Finite Element Methods. Also determine the reaction forces. The material properties and dimensions of the truss are given below and in the figure-1 : **20**

$E = 2X10^6$ Kg/cm^2, A is cross sectional area of all members is 8 cm^2

Derive stiffness matrix for a bar inclined at an angle α to x-axis

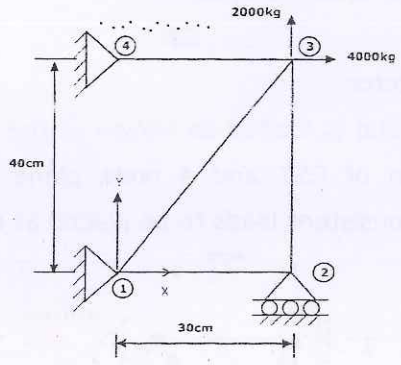

Fig. 1

2. Write short notes on **any two** of the following **10×2=20**

a) Material non-linear analysis

b) Multi-point constraint

c) Galerkin method

3. A tapered bar and a straight bar are connected as shown in the figure. Idealize the tapered bar into 2 uniform area bars. Determine the nodal displacements and stresses in the straight bar using FE method. Estimate the reactions at the supports. Assume $E = 200 \times 10^9$ N/m^2, P = 200 KN **20**

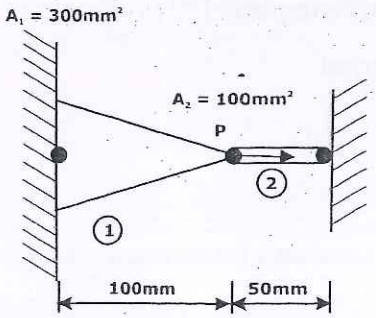

OR

JAIN (Deemed-to-be University) Learning Resource Centre Jain Global Campus Ramanagar-112

4. a. Draw a typical triangle in real co-ordinate system. Show the transformed geometry in natural coordinate system. Given a point (ξ_0 , η_0) in natural co-ordinate system, show how you can find the corresponding (x_0, y_0) in real coordinate system. **08**

b. Evaluate in a CST element the integral, where N_1, N_2, N_3 are the shape functions for the element in natural co-ordinate system. **12**

$$I = \int_{-1}^{1}\int_{-1}^{1} N_2 N_3 \det J \, d\xi d\eta$$

5. a. For a 4 node quadrilateral element, write the acceptable shape functions in natural co-ordinate system. Show that they satisfy the requirements of shape functions. Are they iso-parametric elements? **08**

b. Using the shape functions in the natural co-ordinate system, derive the Jacobian of transformation between the derivatives in the real co-ordinate system and the natural co-ordinate systems. **12**

OR

6. a. Define consistent load vector **08**

b. ABCDE 2- dimensional solid is loaded as shown in the figure. The solid is divided into combination of CST and 4 node plane stress elements as shown. Determine the consistent loads to be placed at nodes B, C, D, E. **12**

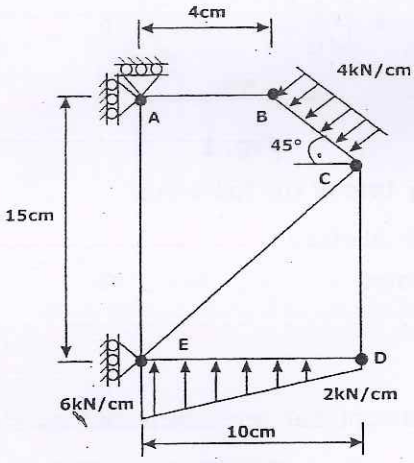

Fig. 6 (b)

7. a. Describe Trapezoidal rule to integrate $\int_a^b f(x)dx$ **06**

b. Evaluate the following integral **14**

$$I = \int_2^4 \left[e^{2x} + x^2 + \frac{1}{(x^2+4)} \right] dx$$

using 2-point and 3-point Gaussian Integration. The locations and weights

3- point integration $\xi_i = \pm 0.7746, i = 1,3$ $w_i = 0.5556$, $i = 1,3$

$\xi_i = 0, i = 2$ $w_i = 0.8889, i = 2$

2-point integration $\xi_i = \pm 1/3$ $w_i = 1$, $i = 1,2$

OR

8. a. Explain with an example the elimination approach and the Penalty approach of satisfying the boundary conditions in Finite element method. As an example illustrate with imposing a boundary condition of displacement $q_6 = a$, in a 12-degree of freedom FEM problem. **14**

b. Discuss the merits and demerits of the two approaches mentioned in (8a). **06**